THIS DOCUMENT CONTAINS PROPRIETARY INFORMATION WITH ALL RIGHTS
WITHOUT WRITTEN CONSENT OF CONTROL COMPONENTS INC.

PARTS LIST

ITM	DESCRIPTION	MATERIAL	QTY	REMARKS
A	ACTUATOR	STI	1	SC/V ND 250/80
B	CHECK VALVE	SILMER	1	DI 1/4"
AB	AIR TANK	STI	1	18LT
AFR	AIR FILTER REGULATOR	NORGREN	1	B73G 1/2"
P	POSITIONER	SIEMENS	1	SIPART PS2
AL	PRESSOSTATIC HEAD	STI	1	AL
EV1	3-WAY SOLENOID VALVE	NADI	1	C03T1600P/H/V/NPT 24VDC
EV2	3-WAY SOLENOID VALVE	NADI	1	C06T1600P/H/V/NPT 24VDC
PT	POSITION TRANSMITTER	SOLARTRON	1	LVDT
LS1,2	LIMIT SWITCH	P&F	2	NO8 18GM50 E2
D1-4	3-WAY PNEUMATIC VALVE	STI	4	CO 1/2"
JB	JUNCTION BOX	ELFIN	1	C40C2020-8
VB1-2	VOLUME BOOSTER	STI	2	VB 1/4"

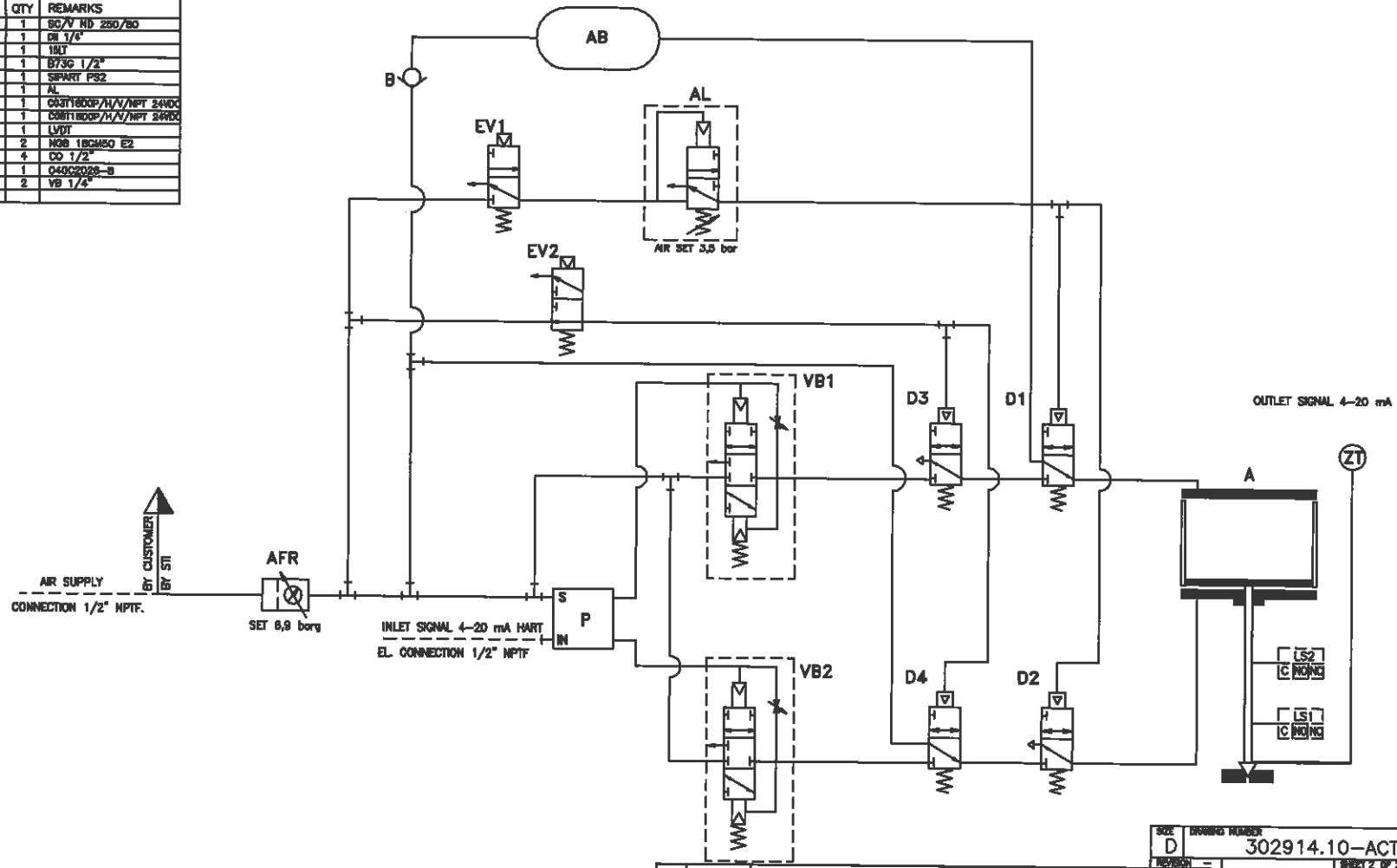

CONTROL LOGIC					
AIR SUPPLY	OK	OK	OK	FAIL	OK
SOLENOID EV1 (TO TRIP CLOSE)	ENERGIZE	DE-ENERGIZE	ENERGIZE	ANY	ENERGIZE
SOLENOID EV2 (TO TRIP OPEN)	DE-ENERGIZE	ANY	ENERGIZE	ANY	DE-ENERGIZE
SIGNAL	OK	OK	OK	ANY	FAIL
VALVE POSITION	MODULATING	CLOSE	OPEN	CLOSE	CLOSE

REV.	DATA	DESCRIZIONE DELLA REVISIONE	ESEGUITO	CONTR./APPROV.
B	30/06/11	REVISED SOV POWER SUPPLY	B.CARRARA	L.MOSTOSI
A	04/07/11	ISSUED	B.CARRARA	L.MOSTOSI

SIZE D — DRAWING NUMBER 302914.10-ACT — REVISION – — SHEET 2 OF 2

STI

PNEUMATIC DIAGRAM

PROJECT: METZ (FRANCE)
CUSTOMER: AE&E INOVA FRANCE
VALVE: VST-90RBSE
TAG C7GPCV102

SOSTITUISCE IL — SOSTITUITO DAL

DIS.N° 111223TD01

FILE 111223TD01.DWG

PAG. N° — DI N°